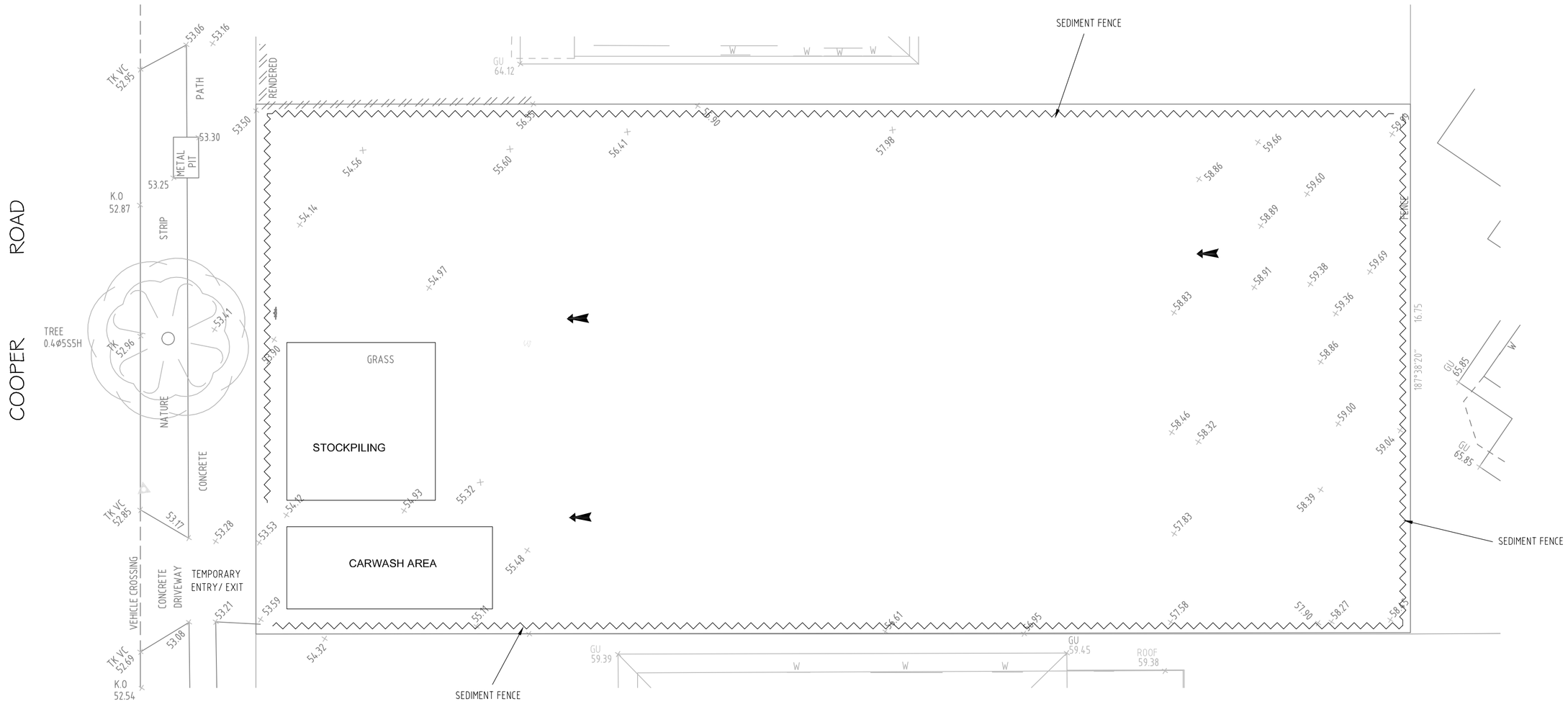

EROSION & SEDIMENT CONTROL PLAN

SCALE 1:100

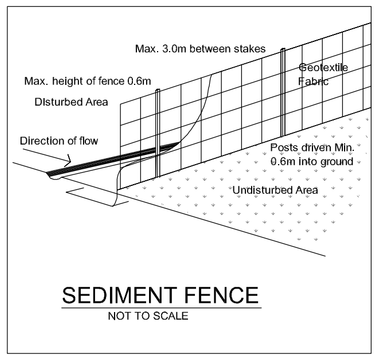

SEDIMENT FENCE
NOT TO SCALE

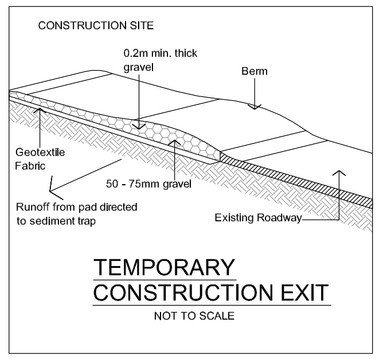

TEMPORARY CONSTRUCTION EXIT
NOT TO SCALE

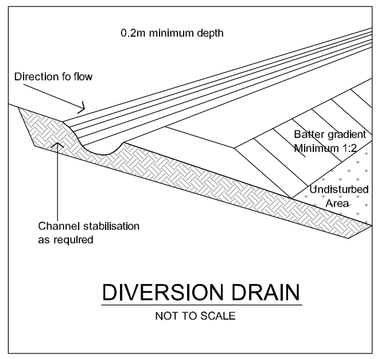

DIVERSION DRAIN
NOT TO SCALE

SCALE 1:100 @A1 — 0 1 2 3 4 5 m

General notes	Issue	Amendments	Date	Issue	Amendments	Date
NOT FOR CONSTRUCTION	A	For DA submission	27.01.23			
- Minimum roofgutter slope of 0.3% to downpipe						
- Drainage pipes are Ø100 minimum						
- Dimensions in mm unless indicated otherwise						

LEGEND

+ 45.20	Existing level		Proposed drainage line
45.0	Existing contour		Proposed drainage pit
+45.20	Finished level	DP ●	Proposed Down Pipe
45.20	Proposed contour		Overland flow direction

KD STORMWATER Pty. Ltd
ACN 605 367 548
1/613-615 Princes Hwy, Rockdale, NSW 2216
Email Admin@KDstormwater.com
Mob. 0432 211 421

CHECKED BY
KY TRAN
BSc,MEngSc,MIEAust,CPEng,NER (3109482)

SCALE: AS SHOWN

PROJECT: PROPOSED SINIGLE DWELLING
No 197 COOPER ROAD, YAGOONA
NSW

EROSION & SEDIMENT CONTROL PLAN

Drawn: KT | Job #: DG 2605A | Date: 12.12.22 | Sheet 1 of 1